CATALOGUE

SERVING BEER TANKS 2022



MUELLER

CONTENT

SERVING BEER TANK

1 Serving Beer Tank - Single Walled 4
Frames - Serving Beer Tank - Single Walled 5
2 Serving Beer Tank - Double Walled 7
Frames - Serving Beer Tank - Double Walled 8
3 Vertical Serving Beer Tank 10
4 Inliners for Serving Beer Tank 11
5 Accessories 12

TRANSPORTATION BEER TANKS

6 Transportation Beer Tank - Horizontal 13
7 Transportation Beer Tank 500 Liter - Single Walled 14
8 Transportation Beer Tank 500 Liter - Double Walled 15

SERVING BEER TANK FOR USE WITHOUT INLINERS

9 Serving Beer Tank - Single Walled 16
10 Serving Beer Tank - Double Walled 17
11 Accessories 18

SPARE PARTS

12 Spare Parts 19
13 Explanation of Article Numbers for Tanks 23

SERVING BEER TANK





Serving Beer Tank - Bottom Outlet



Serving Beer Tank - Front Outlet

HORIZONTAL, SINGLE WALLED BEER TANK

- Standard features Serving Beer Tank:
  - 1 x separate oval manhole cover 310 x 440 mm
  - 2 x sight glass DN 80 on the top of the front side Ø 791 mm
  - 2 x sight glass DN 50 for the tank version in Ø 630 mm
  - 1 x connection for “Mueller” piercing unit front or bottom outlet
  - 1 x connection for pressure regulator: nipple ¾“ BSP
- Material: AISI 304
- Finish: 2B, completely pickled and passivated
- Tank suitable for 3.9 bar (+50°C), according PED 2014/68/EU

PRICES - ON REQUEST

Volume (Liter)	**Diameter** (mm)	**Total length** (mm)	**Weight** (KG)	**Stainless Steel**	**Inliner Article Number**
250	Ø 630	± 985	70		808761
500	Ø 630	± 1.800	100		331902
500	Ø 791	± 1.290	100		808711
1000	Ø 791	± 2.320	150		808723
1500	Ø 791	± 3.340	200		On Request

For inliner options see page 13.

SERVING BEER TANK
BOTTOM OUTLET

I

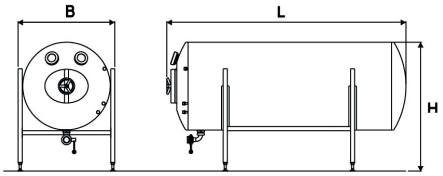

II

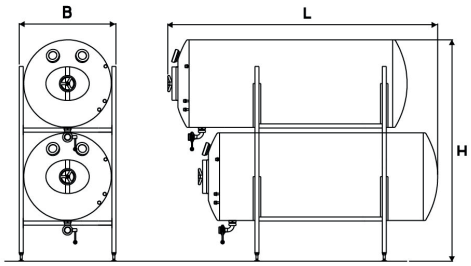

III

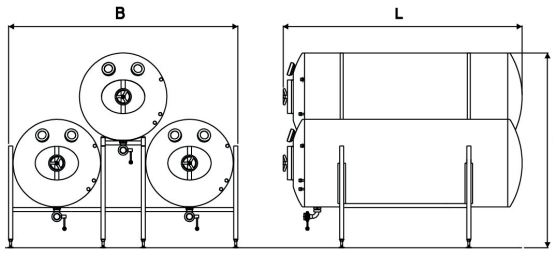

IV

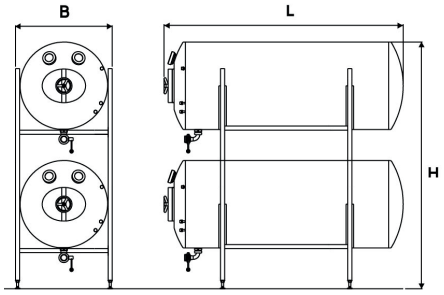

Drawing	Volume (Liter)	Width (B) mm	Height (H) mm	Length (L) mm	Article Number Complete Set
I	250	725	1.030*	985	0250SW6301U
	500	725	1.030*	1.820	0500SW6301U
	500	880	1.190*	1.290	0500SW7911U
	1000	880	1.190*	2.320	1000SW7911U
	1500	880	1.190*	3.390	1500SW7911U
II	250	725	1.785*	1.135**	0250SW6302U
	500	725	1.785*	1.970	0500SW6302U
	500	880	2.105*	1.590	0500SW7912U
	1000	880	2.105*	2.620	1000SW7912U
	1500	880	2.105*	3.690	1500SW7912U
III	250	1.795	1.515*	985**	0250SW6303U
	500	1.795	1.515*	1.820	0500SW6303U
	500	2.155	1.798*	1.290	0500SW7913U
	1000	2.155	1.798*	2.320	1000SW7913U
	1500	2.155	1.798*	3.390	1500SW7913U
IV	250	725	2.035*	985**	0250SW6304U
	500	725	2.035*	1.820	0500SW6304U
	500	880	2.355*	1.290	0500SW7914U
	1000	880	2.355*	2.320	1000SW7914U
	1500	880	2.355*	3.390	1500SW7914U

** (+/- 20mm) height flexibility by using assembling set*
*** Please contact us for mounting options*

SERVING BEER TANK
FRONT OUTLET

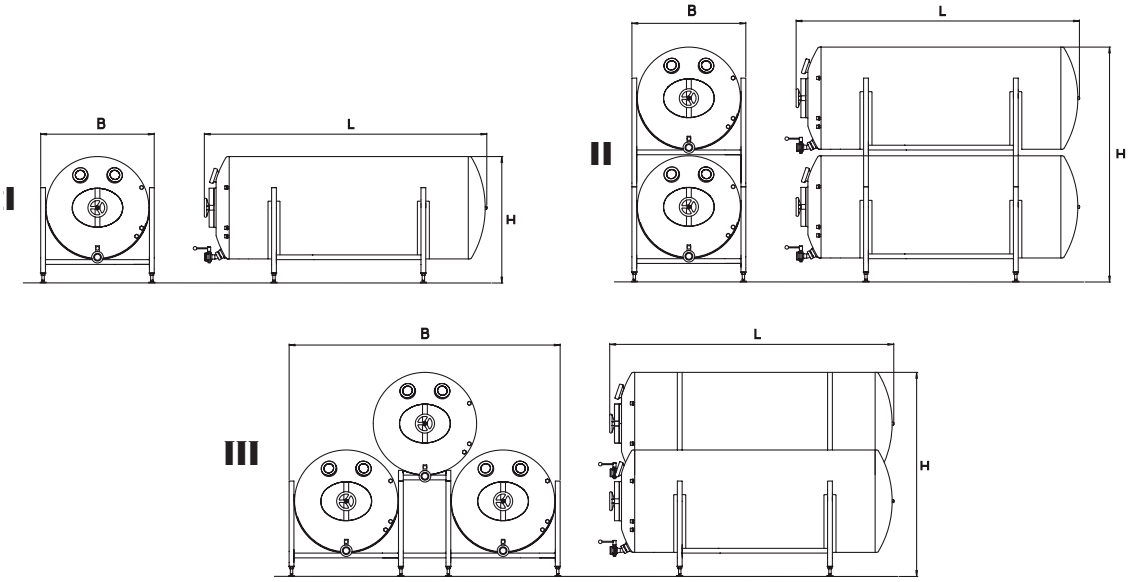

Drawing	Volume (Liter)	Width (B) mm	Height (H) mm	Length (L) mm	Article Number Complete Set
I	250	725	830*	1.040	0250SW6301F
	500	725	830*	1.860	0500SW6301F
	500	880	1.000*	1.290	0500SW7911F
	1000	880	1.000*	2.320	1000SW7911F
	1500	880	1.000*	3.390	1500SW7911F
II	250	725	1.630*	1.040	0250SW6302F
	500	725	1.630*	1.860	0500SW6302F
	500	880	1.875*	1.290	0500SW7912F
	1000	880	1.875*	2.320	1000SW7912F
	1500	880	1.875*	3.390	1500SW7912F
III	250	1.800	1.330*	1.040	0250SW6303F
	500	1.800	1.330*	1.860	0500SW6303F
	500	2.155	1.615*	1.290	0500SW7913F
	1000	2.155	1.615*	2.320	1000SW7913F
	1500	2.155	1.615*	3.390	1500SW7913F

** (+/- 20mm) height flexibility by using assembling set*
*** Please contact us for mounting options*

HORIZONTAL, DOUBLE WALLED BEER TANK

- Standard features Serving Beer Tank:
  - Insulated with 35 mm PU-foam
  - Cooling through copper coils, suitable for ice water, connections: nipple 5/8“ BSP outer thread at the back side of the tank
  - 1 x separate oval manhole cover 310 x 440 mm
  - 2 x sight glass DN 80 on the top of the front side for tank Ø 860 mm
  - 2 x sight glass DN 50 on the top of the front side for tank Ø 860 mm
  - 1 x connection for “Mueller” piercing unit front or bottom outlet
  - 1 x connection for pressure regulator: nipple ¾“ BSP
- Material: AISI 304
- Finish:
  - Inside: 2B, completely pickled and passivated
  - Outside: Stainless steel tank completely ground; full copper in lacquer finish
- Tank suitable for 3.9 bar (+50°C), according PED 2014/68/EU

PRICES On Request

Volume (Liter)	**Diameter** (mm)	**Total Length** (mm)	**Stainless Steel**	**Weight** (KG)	**Copper**	**Inliner Article Number**
250	Ø 630/700	± 1.035		100		808761
500	Ø 630/700	± 1.870		150		331902
500	Ø 791/860	± 1.315		150		808711
1000	Ø 791/860	± 2.350		250		808723
1500	Ø 791/860	± 3.370		350		On Request

SERVING BEER TANK
BOTTOM OUTLET

I

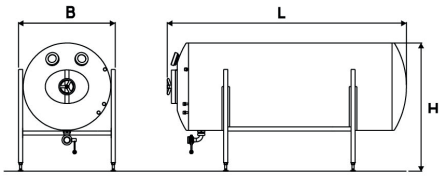

II

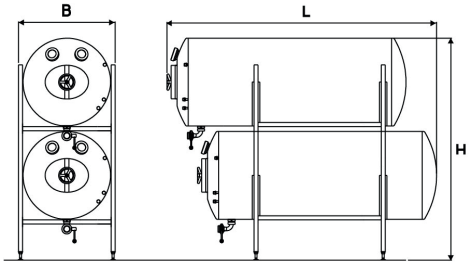

III

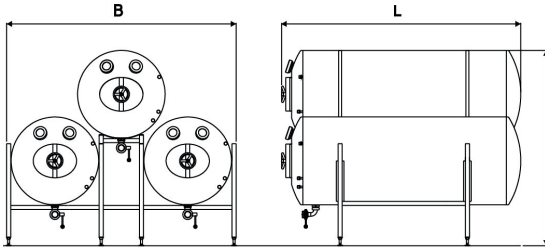

IV

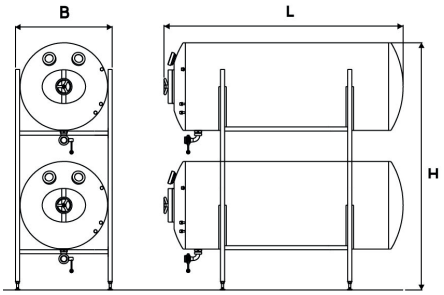

Drawing	Volume (Liter)	Width (B) mm	Height (H) mm	Length (L) mm		Article Number Complete Set
I	250	795	1.100*	1.035		0250DW7001U
	500	795	1.100*	1.870		0500DW7001U
	500	950	1.260*	1.315		0500DW8601U
	1000	950	1.260*	2.350		1000DW8601U
	1500	950	1.260*	3.390		1500DW8601U
II	250	795	1.855*	1.235**		0250DW7002U
	500	795	1.855*	2.070		0500DW7002U
	500	950	2.175*	1.615		0500DW8602U
	1000	950	2.175*	2.650		1000DW8602U
	1500	950	2.175*	3.690		1500DW8602U
III	250	1.935	1.590*	1.035**		0250DW7003U
	500	1.935	1.590*	1.870		0500DW7003U
	500	2.255	1.915*	1.315		0500DW8603U
	1000	2.255	1.915*	2.350		1000DW8603U
	1500	2.255	1.915*	3.390		1500DW8603U
IV	250	795	2.100*	1.035**		0250DW7004U
	500	795	2.100*	1.870		0500DW7004U
	500	950	2.425*	1.315		0500DW8604U
	1000	950	2.425*	2.350		1000DW8604U
	1500	950	2.425*	3.390		1500DW8604U

** (+/- 20mm) height flexibility by using assembling set*
*** Please contact us for mounting options*

SERVING BEER TANK
FRONT OUTLET

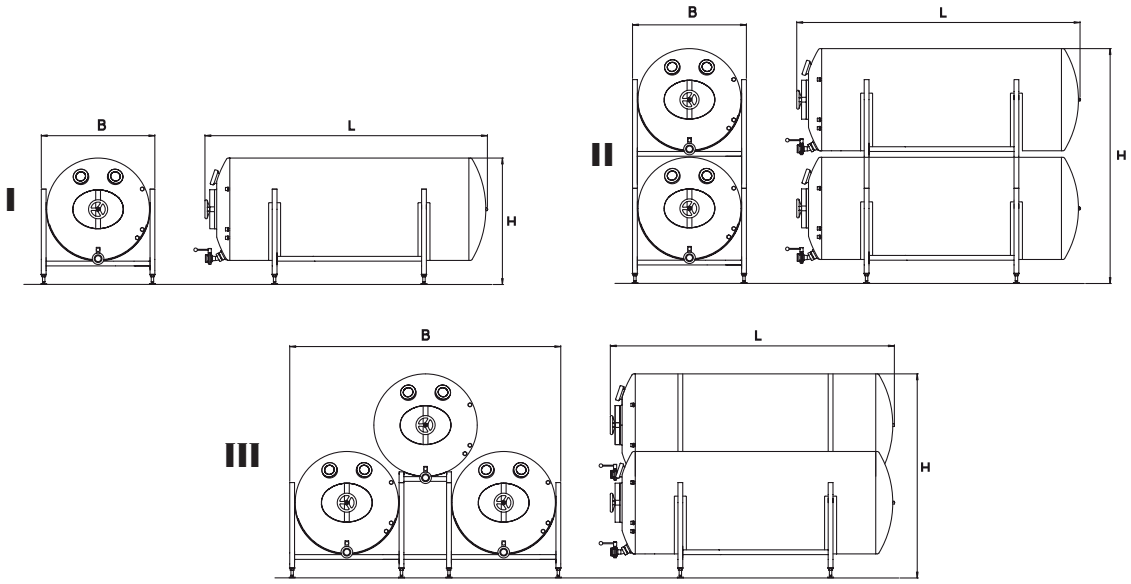

Drawing	Volume (Liter)	Width (B) mm	Height (H) mm	Length (L) mm		Article Number Complete Set
I	250 500 500 1000 1500	795 795 950 950 950	885 885 1.065* 1.065* 1.065*	1.055 1.875 1.315 2.350 3.390		0250DW7001F 0500DW7001F 0500DW8601F 1000DW8601F 1500DW8601F
II	250 500 500 1000 1500	795 795 950 950 950	1.700* 1.700* 1.980* 1.980* 1.980*	1.055 1.875 1.315 2.350 3.390		0250DW7002F 0500DW7002F 0500DW8602F 1000DW8602F 1500DW8602F
III	250 500 500 1000 1500	1.940 1.940 2.225 2.225 2.225	1.400* 1.400* 1.690* 1.690* 1.690*	1.055 1.875 1.315 2.350 3.390		0250DW7003F 0500DW7003F 0500DW8603F 1000DW8603F 1500DW8603F

** (+/- 20mm) height flexibility by using assembling set*
*** Please contact us for mounting options*

3 | VERTICAL SERVING BEER TANK

The vertical tank has a minimal footprint and saves a lot of valuable floorspace.
The eyecatcher behind or above a bar and a hughe contribution in a brewery tasting room.



PRICES ON REQUEST					
Volume (Liter)	**Diameter** (mm)	**Height** (mm)	**Stainless Steel**	**Copper**	**Inliner Art. No.**
250	Ø 630/700	1.410			332442
500	Ø 630/700	2.210			334891

TYPE: HIGH BARRIER

- Film 2 outer ply 1 x LDPE 7-layer film 60-micron; colour: transparent



PRICES FOR HORIZONTAL SERVING BEER TANKS - ON REQUEST					
Art. No.	**Description**	**Volume** (Liter)	**Box**	**1/2 Pallet**	**Pallet**
808761	Inliner HB 250 L hor. Ø630	250			
331902	Inliner HB 500 L hor. Ø630	500 (Ø 630)			
808711	Inliner HB 500 L hor. Ø791	500 (Ø 791)			
808723	Inliner HB 1000 L hor. Ø791	1000			

PRICES FOR VERTICAL SERVING BEER TANKS - ON REQUEST					
Art. No.	**Description**	**Volume** (Liter)	**Box**	**1/2 Pallet**	**Pallet**
332442	Inliner HB 250 L vert. Ø630	250			
334891	Inliner HB 500 L vert. Ø630	500			
808712	Inliner HB 500 L vert. Ø700	500			

Prices for inliners in a different material or for other applications on request.

5 | ACCESSORIES

PRICES - ON REQUEST	
Art. No.	**Description**
708640	“Mueller” piercing unit bottom outlet, incl. butterfly valve DN 40
239733	“Mueller” piercing unit front outlet, incl. butterfly valve DN 40
804043	Pressure regulator 3.0 bar
330835	Pressure regulator 3.9 bar
34750566	Distribution head: - 1 exit 5/8”
34750120	- 2 exits 5/8”
922174	- 3 exits 5/8”
34750121	- 4 exits 5/8”
922175	- 5 exits 5/8”
34750122	- 6 exits 5/8”
	Surcharge hinged manhole cover

6 | TRANSPORTATION BEER TANK HORIZONTAL



- Standard features Serving Beer Tank:
  - Insulated with 35 mm PU-foam and a complete welded stainless steel outer shell
  - Cooling through copper coils, suitable for ice water, connections: nipple 5/8” BSP outer thread at the front side of the tank
  - 1 x separate oval manhole cover 310 x 440 mm
  - 2 x sight glass DN 80 on the top of the front side
  - 2 x sight glass DN 50 on the top of the front side
  - 1 x connection for “Mueller” piercing unit front or bottom outlet
  - 1 x connection for pressure regulator: nipple ¾” BSP
- Material: AISI 304
- Finish:
  - Inside: 2B, completely pickled and passivated
  - Outside: competely ground
- Tank suitable for 3.9 bar (+50°C), according PED 2014/68/EU

CE

PRICES - ON REQUEST

Art. No.	Volume (Liter)	Diameter (mm)	Total length (mm)	Height (mm)	Description
922037	250	835	1175	1030	Mobile stainless steel frame for SBT 250 L, including forklift provision
920933	500	835	2020	1030	Mobile stainless steel frame for SBT 500 L SL, including forklift provision
920963	500	1000	1485	1190	Mobile stainless steel frame for SBT 500 L FB, including forklift provision
921038	1000	1000	2505	1190	Mobile stainless steel frame for SBT 1000 L, including forklift provision

OPTIONS

Description	
Transport wheels, set of 4	

VERTICAL, SINGLE WALLED BEER TANK TO BE USED WITH INLINERS

- Measurements:
  - Ø 700 mm
  - ± 800 x 720 x 1800 mm (LxWxH)
- Standard features beer tank:
  - 1 x separate transparent “oval hand hole” 240 x 190 mm in the shell
  - 1 x connection for a “Mueller” piercing unit in the tank bottom
  - 1 x connection for a pressure regulator armature with nipple ¾“BSP in the top head
  - Stainless Steel frame incl. forklift provision
- Material: AISI 304
- Finish: 2B, completely pickled and passivated
- Tank suitable for 3.0 bar (+50°C), according PED 2014/68/EU

PRICE - ON REQUEST

Volume (Liter)	Diameter (mm)	Height (mm)	Weight (kg)	Stainless Steel	Inliner
500	Ø 700 mm	1800	145		808712

See for inliner options page 13.



8 | TRANSPORTATION BEER TANK 500 LITER DOUBLE WALLED

VERTICAL, DOUBLE WALLED BEER TANK TO BE USED WITH INLINERS

- Measurements:
  - Ø 770 mm
  - ± 900 x 800 x 2000 mm (LxWxH)
- Standard features Serving Beer Tank:
  - Insulated with 35 mm PU-foam and a complete welded stainless steel outer shell
  - Cooling through copper coils, suitable for ice water, connections: nipple 5/8” BSP, at the bottom of the tank
  - 1 x separate transparent “oval hand hole” 240 x 190 mm in the shell
  - 1 x connection for a “Mueller” piercing unit in the tank bottom
  - 1 x connection for a pressure regulator armature with nipple ¾“ BSP in the top head
  - Stainless steel frame incl. forklift provision
- Material: AISI 304
- Finish:
  - Inside: 2B, completely pickled and passivated
  - Outside: 2B, welds ground/brushed
- Tank suitable for 3.0 bar (+50°C), according PED 2014/68/EU

PRICE - ON REQUEST

Volume (Liter)	**Diameter** (mm)	**Height** (mm)	**Stainless Steel**	**Inliner**
500	770 mm	2000		808712

See for inliner options page 13.

HORIZONTAL, SINGLE WALLED BEER TANK TO BE USED WITHOUT INLINERS

- Standard features Serving Beer Tank:
  - 1 x separate oval manhole cover 310 x 440 mm
  - 2 x sight glass DN 80 on the top of the front side
  - 1 x outlet, including butterfly valve DN 40
  - 1 x spray ball DN 20, including CIP-pipe DN 25, ending in thread end DN 25
  - CIP-pipe with a connection for pressure regulator: nipple ¾“ BSP
- Material: AISI 304
- Finish:
  - Inside: 2B, welds grinded (where possible)
  - Tank competely pickled and passivated
- Tank suitable for 3.9 bar (+50°C), according PED 2014/68/EU

PRICES - ON REQUEST			
Volume (Nett/gross Liter)	**Diameter** (mm)	**Total length** (mm)	**Stainless Steel**
500/520 ltr.	Ø 791	± 1.290	
1000/1020 ltr.	Ø 791	± 2.320	

HORIZONTAL, DOUBLE WALLED BEER TANK TO BE USED WITHOUT INLINERS

- Standard features Serving Beer Tank:
  - Insulated with 35 mm PU-foam
  - Cooling through copper coils, suitable for ice water, connections: nipple 5/8” BSP outer thread at the front side of the tank
  - 1 x separate oval manhole cover 310 x 440 mm
  - 2 x sight glass DN 80 on the top of the front side
  - 1 x outlet, including butterfly valve DN 40
  - 1 x spray ball DN 20, including CIP-pipe DN 25, ending in thread end DN 25
  - In the CIP-pipe a connection for pressure regulator: nipple ¾“ BSP
- Material: AISI 304
- Finish:
  - Inside: 2B, welds grinded (where possible)
  - Outside: Stainless steel tank completely ground; full copper in lacquer finish
- 3.0 bar (+50°C), according PED 2014/68/EU
- The tank can be provided with a cooling zone (Temp-Plate®) as alternative to the copper coils. Price on request.

PRICES - ON REQUEST

Volume (Liter)	**Diameter** (mm)	**Total length** (mm)	**Stainless Steel**	**Copper**
500/520 ltr.	Ø 791/860	± 1.315		
1000/1020 ltr.	Ø 791/860	± 2.350		

10 | ACCESSORIES

OPTIONAL
Description
Level indication with 2 off valve, plexiglass tube and tube holder
Connection for sample valve: thread end DN 20
Sample valve
Connection for thermometer: socket ½” female
Thermometer with casing Ø 100 mm
Spund-armature (Vario 900)
Yeast Pipe

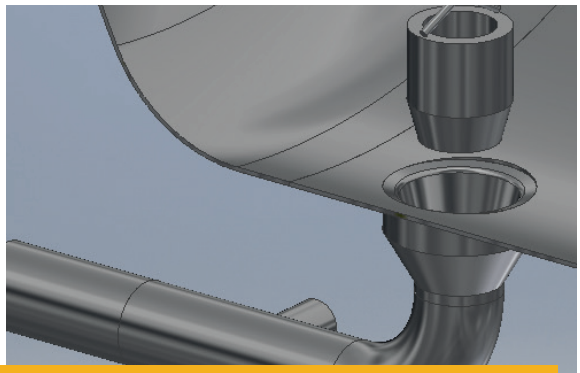

YEAST PIPE

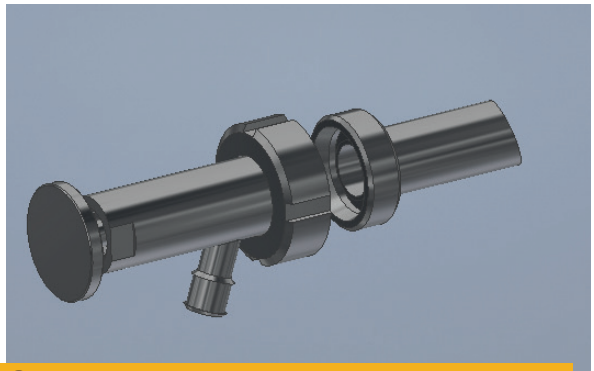

SAMPLE VALVE

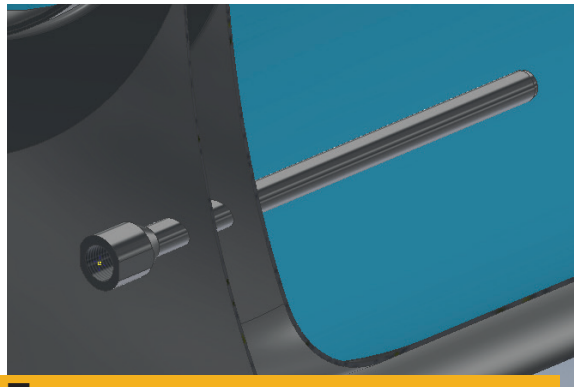

TEMPERATURE SENSOR

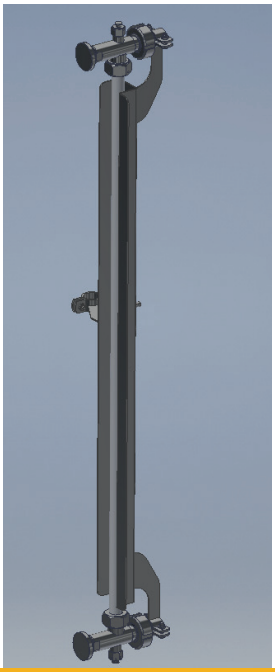

LEVEL INDICATOR

SPARE PARTS


JACKET 1
psi at
°F
°F at
psi
JACKET 1
USgal
MAXOS
DIN 7080 - 16
AW12
FULLER
bar

MANHOLE COVERS	
Art. No.	**Description**
34750553	Manhole cover door complete
34730280	Manhole cover hinged
34730184	Manhole cover with spray ball
Art. No.	**Parts**
34730016	Manhole cover
34710019	Clamp manhole cover advanced
803438	Sealing ring manhole cover
803475	Handwheel
803474	Spring stainless steel
803504	End cap 40x30
135494	Washer M16

PRESSURE REGULATOR PARTS	
Art. No.	**Description**
803988	Distribution cap
331894	Manometer 0-6/3.9 bar
807021	Manometer 0-6/3.0 bar
807023	Safety Valve 3.0 bar
808637	Safety Valve 2.5 bar
330945	Safety Valve 3.9 bar
807620	Sealing ring pressure regulator
807044	Winged nut
807047	Hose tail fitting
807279	Sealing ring
807359	Holder lip valve
807360	Lip valve
807392	Ball valve for pressure regulator
808633	Casing non-return valve

PIERCING UNITS	
Art. No.	**Description**
330054	Piercing unit Butterfly valve DN32
Art. No.	**Parts**
236621	Sealing ring Ø 74x60x2
807282	Sealing ring Ø 50x40x2
36037	Sealing ring DN 40, blue
807335	Sealing ring silicon 61, 5/40,1x4,0 - beer-drive
807337	O-ring
333898	Sealing clamp 1 1/2” NBR
808563	Filling disks (2 parts, moon shelves) beer-drive
236622	Wedge
236623	Threaded bush
803494	Slotted nut DN 32
330099	Seal ring 50 x 34 x 6 mm

DISTRIBUTORS PARTS	
Art. No.	**Description**
34730250	Casing
34730251	Distributor plate (2-lines)
918355	Distributor plate (3 lines)
34730252	Distributor plate (4-lines)
918366	Distributor plate (5 lines)
34730253	Distributor plate (6 lines)
808542	O-ring 38x4 nbr
808541	Sealing ring
807919	Non-return valve
808540	Clamping ring
808555	Spring distribution head

SIGHT GLASS PARTS

Art. No.	Description
803870	Sight glass DN 80 Ø 100x15 mm
807683	Sealing ring sight glass DN80
807684	Sealing ring sight glass NW80
803990	Sight glass gland - NW50
803991	Sight glass Ø65 X10 - DIN 7080
807698	Sealing ring sight glass NW50
807697	Sight glass O-ring DN50

MISCELLANEOUS

Art. No.	Description
807281	Blind cap 5/8”
807758	Reducer 5/8” to 1/2”
331073	Reducer BSP 5/8” IN to BSP 3/4” OUT
38671	Manhole cover ring
235898	Manhole cover seal
330030	Gasket butterfly valve DN40
138977	Level indicator valve DN 20
807856	O-ring 22.00 x 3.00 NBR
807857	Spring distribution head

13 | EXPLANATION OF ARTICLE NUMBERS FOR TANKS

HOW TO MAKE SURE YOU ORDER THE RIGHT TANK

Our article numbers contain 8 digits. The table below shows what the digits stands for.

Explanation structure article numbers:

POSITION	1	2/3	4	5	6	7	8
	Material	Volume	Diameter	Outlet	Manhole	Therm	Water connection
0			SW Ø 791mm			None	
1		10=1000L	DW Ø 791/860mm				
2							
3		03 = 250L					
4	Stainless steel						
5		05 = 500L	SW Ø 630mm	Bottom			
6	Copper		DW Ø 630/700mm				
7					Standard		
8				Front			5/8” front
9							5/8” rear

EXAMPLES

Example 1: 500L single-walled stainless steel tank, diameter 791mm, with front outlet, water connection at the front.

Corresponding article number: 40508708

Example 2: 1000L double-walled copper tank with bottom outlet, water connection at the rear.

Corresponding article number: 61015709

PLEASE NOTE

Single-walled tanks in copper are not available.

Diameter 630mm and 630 / 700mm are not available with a volume of 1000L